SEARS

OWNER'S MANUAL

MODEL NO. 315.116040

CAUTION: Read Rules for Safe Operation and All Instructions Carefully

Save This Manual For Future Reference

Thank You for Buying Craftsman Tools

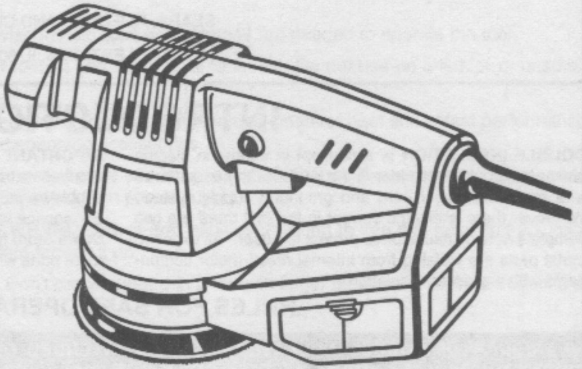

CRAFTSMAN®

4-1/2 inch Random Orbit Sander Double Insulated

Warranty
Introduction
Operation
Maintenance
Repair Parts

Designed exclusively for and sold only by
SEARS, ROEBUCK AND CO., Hoffman Estates, IL 60179

612547-883
5-94

Printed In U.S.A.

FULL ONE YEAR WARRANTY ON CRAFTSMAN RANDOM ORBIT SANDER

If this Craftsman Random Orbit Sander fails to give complete satisfaction within one year from the date of purchase **RETURN IT TO THE NEAREST SEARS SERVICE CENTER / DEPARTMENT THROUGHOUT THE UNITED STATES** and Sears will repair it, free of charge.

If this sander is used for commercial or rental purposes this warranty applies for only 90 days from the date of purchase.

This warranty gives you specific legal rights, and you may also have other rights which vary from state to state.

SEARS, ROEBUCK AND CO.
DEPT. 817 WA
HOFFMAN ESTATES, IL 60179

INTRODUCTION

DOUBLE INSULATION is a concept in safety, in electric power tools, which eliminates the need for the usual three wire grounded power cord and grounded supply system. Wherever there is electric current in the tool there are two complete sets of insulation to protect the user. All exposed metal parts are isolated from internal metal motor components with protecting insulation.

IMPORTANT - Servicing of a tool with double insulation requires extreme care and knowledge of the system and should be performed only by a qualified service technician. For service we suggest you return the tool to your nearest Sears Store for repair. Always use original factory replacement parts when servicing.

RULES FOR SAFE OPERATION

WARNING: THE DOUBLE INSULATED SYSTEM IS INTENDED TO PROTECT THE USER FROM SHOCK RESULTING FROM A BREAK IN THE TOOL'S INTERNAL WIRING. OBSERVE ALL NORMAL SAFETY PRECAUTIONS RELATED TO AVOIDING ELECTRICAL SHOCK.

WARNING : DO NOT ATTEMPT TO OPERATE THIS TOOL UNTIL YOU HAVE READ THOROUGHLY AND UNDERSTAND COMPLETELY ALL INSTRUCTIONS, SAFETY RULES, ETC. CONTAINED IN THIS MANUAL. FAILURE TO COMPLY CAN RESULT IN ACCIDENTS INVOLVING FIRE, ELECTRIC SHOCK, OR SERIOUS PERSONAL INJURY. SAVE OWNERS MANUAL AND REVIEW FREQUENTLY FOR CONTINUING SAFE OPERATION, AND INSTRUCTING OTHERS WHO MAY USE THIS TOOL.

READ ALL INSTRUCTIONS

1. **KNOW YOUR POWER TOOL -** Read owner's manual carefully. Learn its applications and limitations as well as the specific potential hazards related to this tool.
2. **GUARD AGAINST ELECTRICAL SHOCK BY PREVENTING BODY CONTACT WITH GROUNDED SURFACES.** For example: Pipes, radiators, ranges, refrigerator enclosures.
3. **KEEP GUARDS IN PLACE** and in working order.
4. **KEEP WORK AREA CLEAN.** Cluttered areas and benches invite accidents.
5. **AVOID DANGEROUS ENVIRONMENT.** Don't use power tool in damp or wet locations or expose to rain. Keep work area well lit.
6. **KEEP CHILDREN AND VISITORS AWAY.** All visitors should wear safety glasses and be kept a safe distance from work area. Do not let visitors contact tool or extension cord.
7. **STORE IDLE TOOLS.** When not in use tools should be stored in a dry, high or locked-up place - out of the reach of children.
8. **DON'T FORCE TOOL.** It will do the job better and safer at the rate for which it was designed.
9. **USE RIGHT TOOL.** Don't force small tool or attachment to do the job of a heavy duty tool. Don't use tool for purpose not intended - for example - Don't use a circular saw for cutting tree limbs or logs.
10. **WEAR PROPER APPAREL.** No loose clothing or jewelry to get caught in moving parts. Rubber gloves and non-skid footwear are recommended when working outdoors. Also, wear protective hair covering to contain long hair and keep it from being drawn into air vents.

RULES FOR SAFE OPERATION (Continued)

11. **ALWAYS WEAR SAFETY GLASSES.** Everyday eyeglasses have only impact-resistant lenses; they are **NOT** safety glasses.
12. **PROTECT YOUR LUNGS.** Wear a face or dust mask if operation is dusty.
13. **PROTECT YOUR HEARING.** Wear hearing protection during extended periods of operation.
14. **DON'T ABUSE CORD.** Never carry tool by cord or yank it to disconnect from receptacle. Keep cord from heat, oil and sharp edges.
15. **SECURE WORK.** Use clamps or a vise to hold work. Both hands are needed to operate the tool.
16. **DON'T OVERREACH.** Keep proper footing and balance at all times. Do not use on a ladder or unstable support.
17. **MAINTAIN TOOLS WITH CARE.** Keep tools sharp at all times, and clean for best and safest performance. Follow instructions for lubricating and changing accessories.
18. **DISCONNECT TOOLS.** When not in use, before servicing, or when changing attachments, blades, bits, cutters, etc., all tools should be disconnected from power supply.
19. **REMOVE ADJUSTING KEYS AND WRENCHES.** Form habit of checking to see that keys and adjusting wrenches are removed from tool before turning it on.
20. **AVOID ACCIDENTAL STARTING.** Don't carry plugged-in tools with finger on switch. Be sure switch is off when plugging in.
21. **OUTDOOR USE EXTENSION CORDS.** When tool is used outdoors, use only extension cords suitable for use outdoors. Outdoor approved cords are marked with the suffix W-A, for example - SJTW-A or SJOW-A.
22. **NEVER USE THIS OR ANY POWER SANDER FOR WET SANDING.** Failure to comply can result in electrical shock causing serious injury or worse.
23. **KEEP HANDS AWAY FROM SANDING AREA.**
24. **NEVER USE IN AN EXPLOSIVE ATMOSPHERE.** Normal sparking of the motor could ignite fumes.
25. **INSPECT TOOL CORDS PERIODICALLY** and if damaged, have repaired at your nearest Sears Repair Center. Stay constantly aware of cord location.
26. **INSPECT EXTENSION CORDS PERIODICALLY** and replace if damaged.
27. **KEEP HANDLES DRY, CLEAN, AND FREE FROM OIL AND GREASE.** Always use a clean cloth when cleaning. Never use brake fluids, gasoline, petroleum-based products or any strong solvents to clean your tool.
28. **STAY ALERT.** Watch what you are doing and use common sense. Do not operate tool when you are tired. Do not rush.
29. **CHECK DAMAGED PARTS.** Before further use of the tool, a guard or other part that is damaged should be carefully checked to determine that it will operate properly and perform its intended function. Check for alignment of moving parts, binding of moving parts, breakage of parts, mounting, and any other conditions that may affect its operation. A guard or other part that is damaged should be properly repaired or replaced by an authorized service center unless indicated elsewhere in this instruction manual.
30. **DO NOT USE TOOL IF SWITCH DOES NOT TURN IT ON AND OFF.** Have defective switches replaced by an authorized service center.
31. Inspect for and remove all nails from lumber before sanding.
32. **DRUGS, ALCOHOL, MEDICATION.** Do not operate tool while under the influence of drugs, alcohol, or any medication.
33. **When servicing use only identical Craftsman replacement parts.**
34. **SAVE THESE INSTRUCTIONS.** Review them frequently and use them to instruct others who may use this tool. If you loan someone this tool, loan them these instructions also.

FEATURES

Your sander is suitable for sanding with coarse, medium, and fine grit sanding discs. It includes a dust box for dustless sanding. *See Figure1.*

Before attempting to use your sander, familiarize yourself with all operating features and safety requirements.

WARNING: IF ANY PARTS ARE MISSING DO NOT OPERATE YOUR SANDER UNTIL THE MISSING PARTS ARE REPLACED. FAILURE TO DO SO COULD RESULT IN POSSIBLE SERIOUS PERSONAL INJURY.

RANDOM ORBIT

The random orbit motion provides overlapping sanding movements by combining orbital and turning motion. These overlapping sanding movements provide fast cutting action with excellent sanding results.

ELECTRICAL CONNECTION

Your sander has a precision built electric motor. It should be connected to a **power supply that is 120 volts, 60 Hz, AC only (normal household current).** Do not operate this tool on direct current (DC). A voltage drop of more than 10 percent will cause a loss of power and overheating. If your tool does not operate when plugged into an outlet, double-check the power supply.

SWITCH

See Figure 1.

To turn your sander **"ON"**, depress the switch trigger. Release switch trigger to turn your sander **"OFF"**.

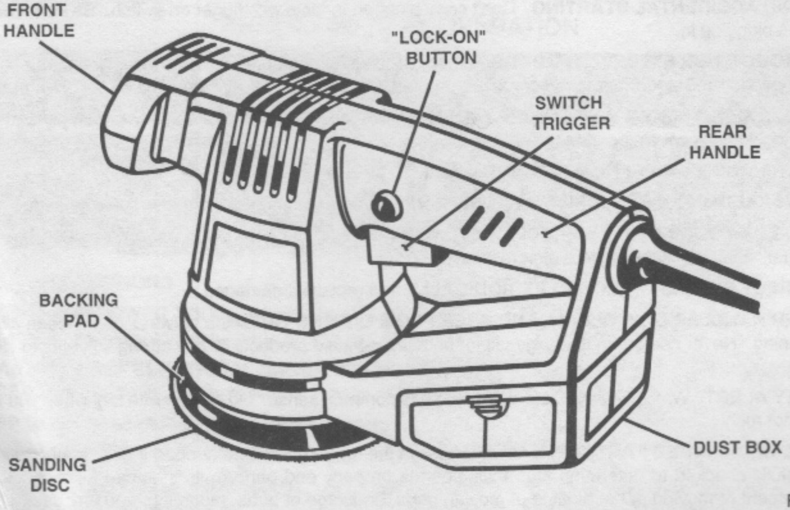

Fig. 1

WARNING: DO NOT ALLOW FAMILIARITY WITH YOUR SANDER TO MAKE YOU CARELESS. REMEMBER THAT A CARELESS FRACTION OF A SECOND IS SUFFICIENT TO INFLICT SEVERE INJURY.

WARNING:

The operation of any sander can result in foreign objects being thrown into your eyes, which can result in severe eye damage. Before commencing power tool operation, always wear safety goggles or safety glasses with side shields and a full face shield when needed. We recommend Wide Vision Safety Mask for use over eyeglasses or standard safety glasses with side shields, available at Sears Retail Stores.

OPERATION

LOCK-ON BUTTON

See Figure 2.

Your sander is equipped with a "lock-on" feature, which is convenient when continuous sanding for extended periods of time is required. **To lock-on,** depress the switch trigger, push in and hold the lock-on button located on the side of the handle, then release switch trigger. Release lock-on button and your sander will continue running. **To release the lock,** depress switch trigger and release it.

If you have the "lock-on" feature engaged during use and your sander becomes disconnected from power supply, disengage the "lock-on" feature immediately.

WARNING: YOUR SANDER SHOULD NEVER BE CONNECTED TO POWER SUPPLY WHEN YOU ARE ASSEMBLING PARTS, MAKING ADJUSTMENTS, ASSEMBLING OR REPLACING SANDING DISC, CLEANING, OR WHEN NOT IN USE. DISCONNECTING SANDER WILL PREVENT ACCIDENTAL STARTING THAT COULD CAUSE SERIOUS PERSONAL INJURY.

TO ATTACH SANDING DISC

See Figure 3.

1. Unplug your sander.

WARNING: FAILURE TO UNPLUG YOUR SANDER COULD RESULT IN ACCIDENTAL STARTING CAUSING POSSIBLE SERIOUS PERSONAL INJURY.

2. Carefully peel adhesive backing from new sanding disc.
3. Align holes in sanding disc with holes in backing pad, then carefully press sticky side of disc against pad as tight as possible. **NOTE:** Holes in sanding disc must line up with holes in the backing pad in order for the dustless feature of your sander to function properly.

SANDING DISC SELECTION

Selecting the correct size grit and type sanding disc is an extremely important step in achieving a high quality sanded finish. Aluminum oxide, silicon carbide, and other synthetic abrasives are best for power sanding. Natural abrasives, such as flint and garnet are too soft for economical use in power sanding.

In general, coarse grit will remove the most material and finer grit will produce the best finish in all sanding operations. The condition of the surface to be sanded will determine which grit will do the job. If the surface is rough, start with a coarse grit and sand until the surface is uniform. Medium grit may then be used to remove scratches left by the coarser grit and finer grit used for finishing of the surface. Always continue sanding with each grit until surface is uniform.

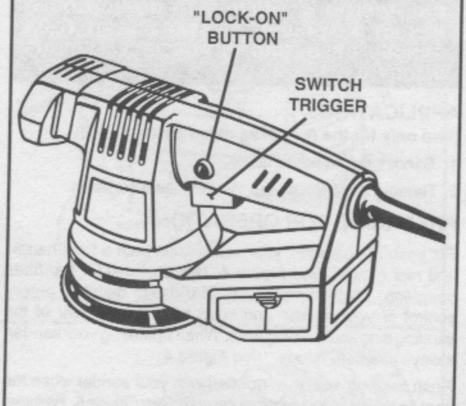

Fig. 2

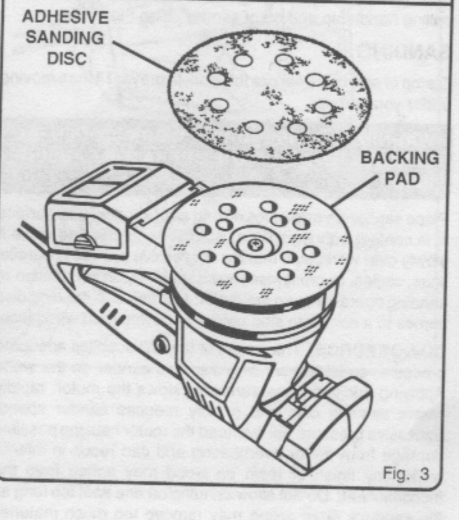

Fig. 3

OPERATION

WARNING: BEFORE CONNECTING YOUR SANDER TO POWER SUPPLY SOURCE, ALWAYS CHECK TO BE SURE SWITCH IS NOT IN "LOCK-ON" POSITION. FAILURE TO DO SO COULD RESULT IN ACCIDENTAL STARTING OF YOUR SANDER RESULTING IN POSSIBLE SERIOUS INJURY.

APPLICATIONS

(Use only for the purposes listed below)

1. Sanding on wood surfaces.
2. Removing rust from and sanding steel surfaces.

PREPARING FOR OPERATION

For ease of operation, your sander has both a front handle and rear handle. *See Figure 4.* This provides for two-hand operation, which is necessary in order to maintain proper control of your sander and keep both hands clear of the sanding disc and sanding area. When operating your sander, always use both hands. *See Figure 4.*

Flush sanding can be performed with your sander when the front handle is removed from sander. *See Figure 5.* Remove front handle by depressing tab under front handle while pulling handle up and off of sander. *See Figure 6.*

SANDING

Clamp or otherwise secure the work to prevent it from moving under your sander.

WARNING: UNSECURED WORK COULD BE THROWN TOWARDS THE OPERATOR CAUSING INJURY.

Place sander on workpiece so that all of sanding disc surface is in contact with workpiece. Start your sander and move it slowly over workpiece making successive passes in parallel lines, circles, or crosswise movements. Upon completion of sanding operation, turn sander off and wait until sanding disc comes to a complete stop before removing from workpiece.

DO NOT FORCE. The weight of the unit supplies adequate pressure, so let the sanding disc and sander do the work. Applying additional pressure only slows the motor, rapidly wears sanding disc and greatly reduces sander speed. Excessive pressure will overload the motor causing possible damage from motor overheating and can result in inferior work. Any finish or resin on wood may soften from the frictional heat. Do not allow sanding on one spot too long as the sander's rapid action may remove too much material, making the surface uneven.

WARNING: DO NOT WEAR LOOSE CLOTHING OR JEWELRY WHEN OPERATING SANDER. THEY COULD GET CAUGHT IN MOVING PARTS CAUSING SERIOUS INJURY. KEEP HEAD AWAY FROM SANDER AND SANDING AREA. HAIR COULD BE DRAWN INTO SANDER CAUSING SERIOUS INJURY.

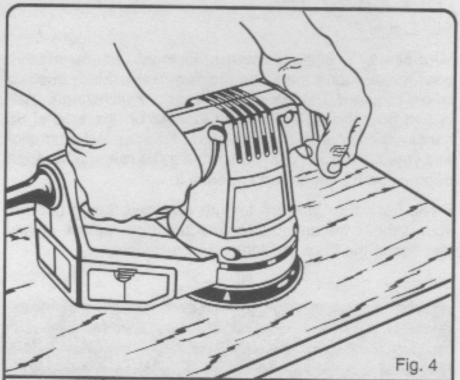

Fig. 4

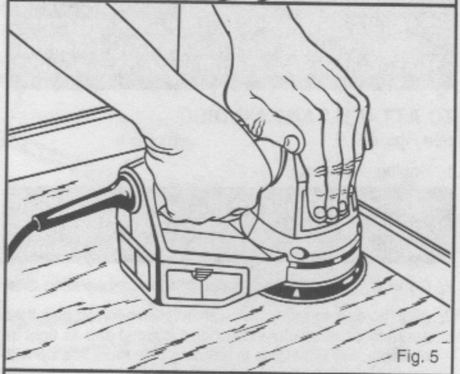

Fig. 5

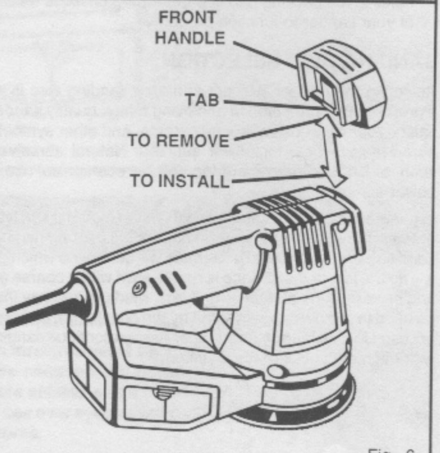

Fig. 6

OPERATION

DUSTLESS SANDING

The dust box located on the rear of your sander provides a dust collection system for your sander. Sanding dust is drawn up through the holes of the sanding disc to collect in the dust box during sanding operation. For more efficient operation, empty dust box when half full.

REMOVING DUST BOX

See Figure 7.

1. To release dust box, depress tabs located on each side of dust box.
2. Slide dust box down and lift from sander as shown by the arrows in figure 7.
3. **DO NOT** press on the filter material with your hand or fingers. Filter material can be damaged.
   NOTE: Filter material is located on the sides of dust box.
4. **DO NOT** break tabs that secure dust box to sander.
5. Empty dust box.

TO INSTALL DUST BOX

See Figure 8.

1. Realign dust box with rear of sander.
2. Slide dust box on sander as shown in figure 8. You will feel a soft click as the tab snaps into place.
   NOTE: As mentioned above, be careful not to break the tabs that secure dust box to sander.

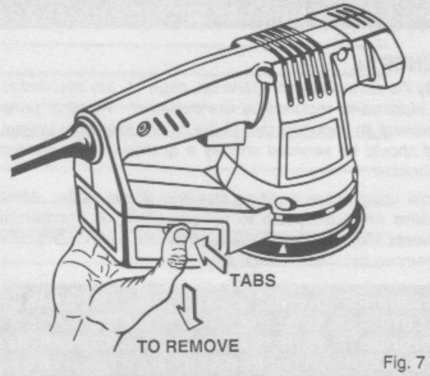

Fig. 7

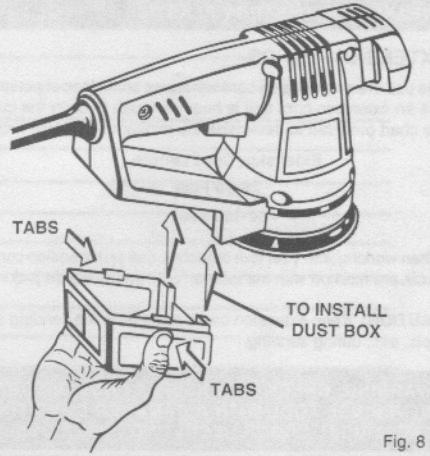

Fig. 8

MAINTENANCE

WARNING: WHEN SERVICING USE ONLY IDENTICAL CRAFTSMAN REPLACEMENT PARTS. USE OF ANY OTHER PARTS MAY CREATE A HAZARD OR CAUSE PRODUCT DAMAGE.

GENERAL

Only the parts shown on parts list, page 11, are intended to be repaired or replaced by the customer. All other parts represent an important part of the double insulation system and should be serviced only by a qualified Sears service technician.

Avoid using solvents when cleaning plastic parts. Most plastics are susceptible to various types of commercial solvents and may be damaged by their use. Use clean cloths to remove dirt, carbon dust, etc.

WARNING: DO NOT AT ANY TIME LET BRAKE FLUIDS, GASOLINE, PETROLEUM-BASED PRODUCTS, PENETRATING OILS, ETC. COME IN CONTACT WITH PLASTIC PARTS. THEY CONTAIN CHEMICALS THAT CAN DAMAGE, WEAKEN, OR DESTROY PLASTIC.

When electric tools are used on fiberglass boats, sports cars, wallboard, spackling compounds, or plaster, it has been found that they are subject to accelerated wear and possible premature failure, as the fiberglass chips and grindings are highly abrasive to bearings, brushes, commutator, etc. Consequently it is not recommended that this tool be used for extended work on any fiberglass material, wallboard, spackling compounds, or plaster. During any use on these materials, it is extremely important that the tool is cleaned frequently by blowing with an air jet.

WARNING: ALWAYS WEAR SAFETY GOGGLES OR SAFETY GLASSES WITH SIDE SHIELDS DURING POWER TOOL OPERATION OR WHEN BLOWING DUST. IF OPERATION IS DUSTY ALSO WEAR A DUST MASK.

EXTENSION CORDS

The use of any extension cord will cause some loss of power. To keep the loss to a minimum and to prevent tool overheating, use an extension cord that is heavy enough to carry the current the tool will draw. Follow the recommended cord sizes on the chart provided to determine the minimum wire size required in an extension cord.

Extension Cord Length	Wire Gauge Size (A.W.G.)
25-50 Feet	18
50-100 Feet	16

When working with your tool outdoors, use an extension cord suitable for outdoor use and so marked. Outdoor use extension cords are marked with the letters "WA" on the cord's jacket.

CAUTION: Keep extension cords away from the sanding area and position the cord so that it will not get caught on lumber, tools, etc., during sanding.

WARNING: CHECK EXTENSION CORDS BEFORE EACH USE. IF DAMAGED REPLACE IMMEDIATELY. NEVER USE TOOL WITH A DAMAGED CORD SINCE TOUCHING THE DAMAGED AREA COULD CAUSE ELECTRICAL SHOCK RESULTING IN SERIOUS INJURY.

LUBRICATION

All of the bearings in this tool are lubricated with a sufficient amount of high grade lubricant for the life of the unit under normal operating conditions. Therefore, no further lubrication is required.

NOTES

CRAFTSMAN 4-1/2 INCH RANDOM ORBIT SANDER
MODEL NUMBER 315.116040

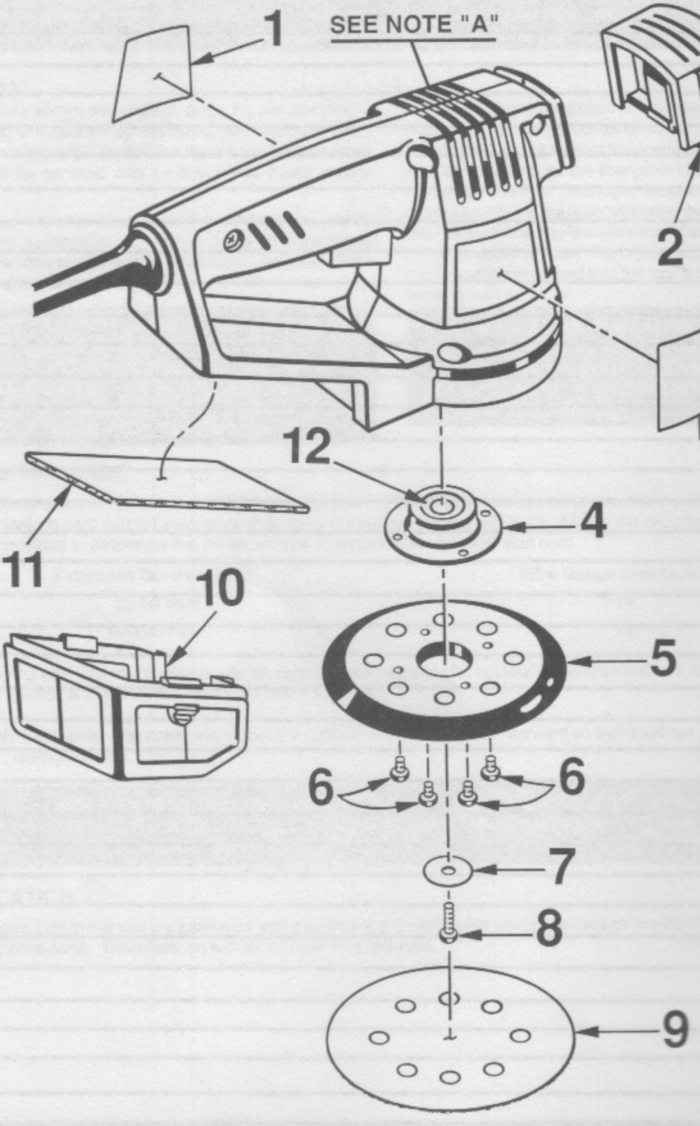

NOTE: "A" - The assembly shown represents an important part of the Double Insulated System. To avoid the possibility of alteration or damage to the System, service should be performed by your nearest Sears Repair Center. Contact your nearest Sears Retail Store.

CRAFTSMAN 4-1/2 INCH RANDOM ORBIT SANDER
MODEL NUMBER 315.116040

The model number will be found on a plate attached to the motor housing. Always mention the model number in all correspondence regarding your **SANDER** or when ordering repair parts.

SEE BACK PAGE FOR PARTS ORDERING INSTRUCTIONS

PARTS LIST

Key No.	Part Number		Description	Quan.
1	971361-001		Logo Plate	1
2	969645-001		Front Handle	1
3	971360-001		Data Plate	1
4	970214-000		Bearing Cap w/Bearing (Inc. key no. 12)	1
5	968333-004		Backing Pad	1
6	998586-001	*	Screw (#10-32 X 1/4 Inch Pan Hd.)	4
7	968347-001		Washer	1
8	969649-001		Screw (#8-32 X 1/2Inch Pan Hd. Left Hand)	1
9	***		Sanding Disc:	
	***		150 Grit Fine Item No. 9-28374	5
	***		100 Grit Medium Item No. 9-28375	5
	***		60 Grit Coarse Item No. 9-28376	4
10	969533-002		Dust Box	1
11	970099-001		Seal	1
12	969655-001		Ball Bearing (NTN#6002LLU)	1
	612547-883		Owner's Manual	

*** Standard Hardware Item - May Be Purchased Locally**

***** Complete Assortment Available At Your Nearest Sears Retail Store**

SEARS

OWNER'S MANUAL

SERVICE

MODEL NO. 315.116040

HOW TO ORDER REPAIR PARTS

CRAFTSMAN®

4-1/2 inch Random Orbit Sander Double Insulated

Now that you have purchased your sander, should a need ever exist for repair parts or service, simply contact any Sears Service Center and most Sears, Roebuck and Co. stores. Be sure to provide all pertinent facts when you call or visit.

The model number of your sander will be found on a plate attached to the motor housing.

WHEN ORDERING REPAIR PARTS, ALWAYS GIVE THE FOLLOWING INFORMATION:

- PART NUMBER
- PART DESCRIPTION
- MODEL NUMBER 315.116040
- NAME OF ITEM 4-1/2 inch Random Orbit Sander

All parts listed may be ordered from any Sears Service Center and most Sears stores.

If the parts you need are not stocked locally, your order will be electronically transmitted to a Sears Repair Parts Distribution Center for handling.

SEARS, ROEBUCK AND CO., Hoffman Estates, IL 60179